KLOTZ
MEDIA SOLUTIONS



The Aircaster M12
Hybrid Broadcast Mixer

DIGITAL FLEXIBILITY ANALOG SIMPLICITY

The Aircaster M12 Hybrid Broadcast Mixer



The Aircaster M12 from KLOTZ Media Solutions is a modular audio mixer that combines both analog and digital technology, suitable for use in both on-air and production applications.

It can be used in either self-op (DJ-operated) and tech-op (technician-operated) modes, and is ideal for use by private commercial stations, state broadcasters, educational institutes, religious organisations, community and internet broadcasters.

The M12 bridges the gap between mixers traditionally designed for different purposes, offering a performance that is comparable to all-digital models, and is built for long-term, trouble-free operation, even in demanding environments.

Key Features and Benefits

For the many broadcasters who simply want reliable, fit for purpose, easily maintainable and affordable equipment which offers all of the functionality and connectivity needed in a modern radio studio, the Aircaster M12 audio mixer satisfies these criteria with a superb audio performance, familiar operating surface and surprisingly low cost.

- **Suitable for both live broadcast and production –** simultaneously
- **Flexible operation** – by DJ or technician with talent in a separate room
- **Easy integration with other studio equipment** – features analog and digital inputs and outputs for easy connectivity
- **Modular construction** – a single component failure doesn't render the whole unit inoperative
- **Easily expandable** – simply add more inputs as requirements change
- **Simple installation** – no complex config required – works out of the box
- **No reliance on software** – no upgrades to manage and instant recovery from power outages
- **Familiar control layout** – no learning curve, suitable for novices and experienced operators alike
- **Easy low-tech maintenance** –no reliance on specialist knowledge with readily available spare parts
- **Superior sonic performance** – superb tech specs making a difference that you will hear
- **Feature rich** – incorporating innovative features designed to simplify the workflow and increase productivity

Quite simply - EXCELLENT RETURN ON INVESTMENT

Input Modules

The Aircaster M12 can accommodate up to twelve dual-input modules, along with a Monitor module and a Master module. The input modules can be arranged in any combination and are interchangeable, which allows for easy expansion and updates. The mixer supports both analog and digital (USB) inputs.



MONO INPUT MODULE

This module has two analog inputs, one for microphones and the other for line-level sources. It includes a 3-band equalizer, independent routing to Program and Record buses, and a channel PFL (Pre-Fade Listen) button. It also features a "REMOTE" mini jack for an outgoing "MIC LIVE" command and an incoming "COUGH" contact closure to mute the microphone audio. Selection of mic location (in the control room or adjacent studio) and mic type (condenser or dynamic) is accomplished via ‘hidden’ front panel switches for ease of configuration.

STEREO INPUT MODULE

This module has selectable analog and digital (USB) inputs, allowing for direct connection to a PC for multi-channel playout systems or other applications like YouTube. It has a "START" button for controlling external equipment. Bus routing and PFL controls are the same as the mono module.

PHONE INPUT MODULE

This module supports an external telephone balancing unit (TBU or hybrid) or a direct PC communications application like WhatsApp, WeChat, or Signal via a USB connection. Mobile phones can also connect directly via the USB digital inputs.

It has a 2-band equalizer and a "TB to CALLER" button for talkback. A "CF Select" switch lets you choose whether the cleanfeed comes from the program or record buses, allowing live broadcast or pre-recording. The M12 supports two phone modules, allowing two callers to be on the air at the same time.

Monitor and Master Modules

MONITOR MODULE

This module has independent source selectors for the control room speakers and headphones, as well as for the studio speakers and guest headphones. The speaker outputs automatically mute when a mic is live. It also provides commands for external "MIC LIVE" indicators. Outgoing talkback can be sent to studio speakers and guest headphones, from an internal talkback mic with automatic gain control, with automatic injection of incoming talkback into the monitor chain.
Multiway connectors provide easy communication with a second on-air control room and dedicated talks studio.

MIXER/MASTER MODULE

This module contains the main Program and Record output amplifiers and incorporates 4-colour bar-graph metering and status indicators. The meters follow the selected control room monitor source and can be set to either Peak reading or VU meter responses.

A USB interface provides a selectable feed of either the Program or Record mixes to connect to an external PC.
For playout systems which have a dedicated Cue output, the M12 has an auto-detect function which routes the incoming Cue audio into the control room monitor chain, removing the need to tie up an input module simply to prefade playout audio.

The module also contains a bank of Diagnostics leds which provide an instant indication of mixer status – Loudspeaker Cut and Dim, RTB and Cue audio presence and PSU status.



Mono input



Phone input



Stereo input



Mixer

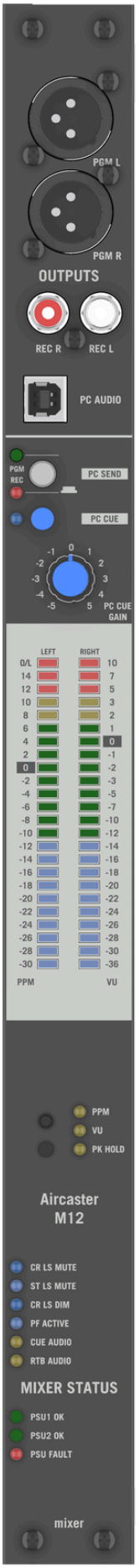

Monitor



Components and Connections

COMPONENTS

The all-metal frame contains a rigid motherboard, into which modules plug, with a positive guidance system which prevents mis-alignment - as opposed to ribbon connectors used in cheaper products, which offer less immunity to interference.



Long throw Alps faders and sealed switches are used, together with Neutric connectors, and low noise 5532 op-amps are used exclusively throughout the audio paths. Mic amp front-ends use SSM 2019 devices - offering near perfect noise performance with incredibly low distortion.



CONNECTIONS

Mic and analog line inputs are all balanced, to minimising external interference, even in hostile environments, and Program and Cleanfeed outputs are also balanced.

The majority of I/O connections and Remotes are at the top of the modules, beneath the connector cover, which simply lifts off to gain access to connectors or to swap modules.

Power inputs (main and redundant) are on the rear face of the mixer, along with duplicate headphone outputs, power outlets for driving external MIC LIVE indicators, as well as line level outputs for feeding external meters.



GPIO

MONO INPUT REMOTES

Each mono input module has a 3.5mm TRS jack, used in conjunction with an external Guest panel which incorporates an illuminating, momentary action pushbutton.

With the corresponding mic channel fader down, pressing this button activates the monitor PreFade function, allowing talkback to the mixer operator - very useful in tech-op situations where talent is in a separate room. This condition is indicated on the console by a flashing of the MIC ON led.

With the channel fader open, the button illuminates indicating a live mic condition; under these circumstances pressing the button acts as a COUGH function, temporarily muting audio, also flashing the MIC ON led.

This simple button has very useful functionality, particularly for speech-based programs with multiple guests.

STEREO INPUT REMOTES

Each stereo input module has a 3.5mm TRS jack which carries an opto-coupled contact closure to an external source when the START button is pressed on the corresponding channel. This can be set to be a pulsed or maintained, and a ‘tally-back’ command from the remote source can illuminate the led adjacent to the START button.

MIC LIVE OUTPUTS

Independent contact closures are provided to drive external MIC LIVE indicators for both control room and studio, active under any live mic conditions.

In addition, on the rear of the mixer, there are p[ower outputs p[roviding 12V DC at up to 150mA for directly powering both control room and studio indicators.



Options and Accessories

The M12 is avaible in 3 standard module configurations, as shown below. Mixers are supplied with generic labels, and are supplied with templates for customer-specific labelling. Input modules can be easily swapped around to meet individual operating preferences, and can be supplied pre-configured in any preferred combination to special order.

M12A



4 x Mono inputs
6 x Stereo inputs
2 x Phone inputs

M12B



4 x Mono inputs
4 x Stereo inputs
2 x Phone inputs

M12C



3 x Mono inputs
4 x Stereo inputs
1 x Phone input

GUEST CONTROL PANELS

These panels are available for each guest or co-presenter mic position.

MIC ARM

An articulated mic-arm, with mounting hardware, pre-wired with XLRs at each end, with an LED ring at the mic end, offering high MIC ON visibility. A small controller with mini jacks provides an interface to the M12 mic module, and for connection to a Guest Panel.

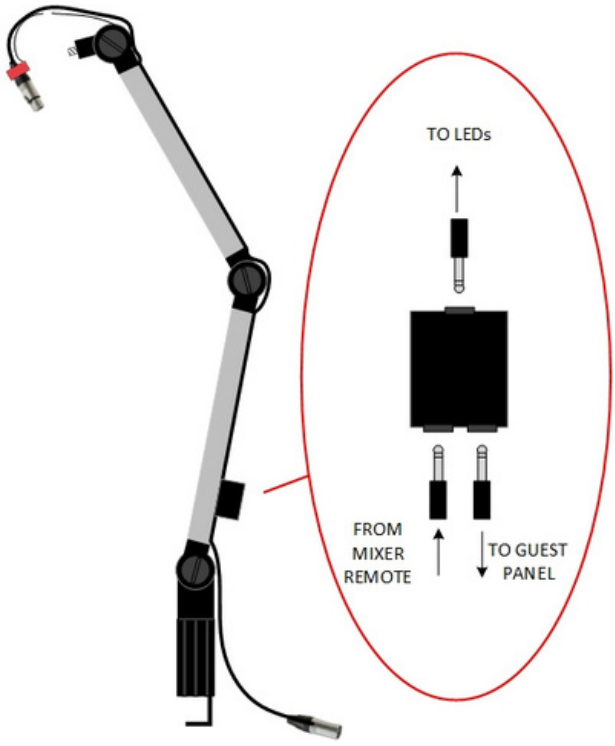

REDUNDANT PSU

The M12 is powered from an external 24V power supply, with internal generation of the multiple sub-rails required for operation. A back-up supply, for permanent connection is available as a user option.

WALL MOUNTING MIC LIVE INDICATOR

Driven directly from the M12 - no external supply required, with a user selectable flash rate.

Typical Performance Specification

Unless otherwise stated, all measurements are made at the PROGRAM outputs into a 10kohm load.
Frequency response measurements are made from 20Hz to 20kHz.
THD, CMRR and Crosstalk/Offness measurements are made at 100Hz, 1kHz and 10kHz.
THD measurements are made at a level of +18dB at the PROGRAM outputs.
Noise measurements are made over a bandwidth from 20Hz to 20kHz with an rms responding measuring device.
Mic noise measurements are made from a 200ohm source resistance; Line noise measurements from a zero ohm source. Noise measurements made with EQ OUT.
All measurements made with faders fully open unless otherwise stated.
0dB corresponds to a voltage of 775mV.

MIX NOISE Measured with 10 modules all routed to the PGM bus, with faders down:	-90dB
Measured with 10 modules routed to the PGM bus, 4 faders open, Line inputs at 0dB gain:	-86dB
FADER OFFNESS:	>90dB
BUS DE-ROUTING:	>90dB
MIC COUGH:	>90dB
SPKR CUT (MUTING):	>80dB
Frequency Response (any input to any output)	+0/-0.5dB
THD (at any input to any output at any gain setting):	<0.1%
MIC Input Noise at 70dB gain:	-57dB (Ein = -127dB)
MIC Input noise at 50dB gain:	-74dB (Ein=-124dB)
MIC Input Gain Range (Hi gain position):	50 to 70dB
MIC Input Gain Range (Lo gain position):	30 to 50dB
MIC Input User Gain Range:	0 to 20dB
LINE Input noise at 0dB gain:	<-86dB
MIC Input Impedance:	10kohm
LINE/TEL Input Impedance:	20kohm
LINE/TEL Input User Gain Range:	+/-10dB
CMRR (mic or line input):	>50dB
CROSSTALK (Stereo channels):	<70dB
L/R Channel difference (Stereo channels):	Within 1dB, typically 0.5dB
PROGRAM Output Impedance:	50R balanced
RECORD Output Impedance:	50R unbalanced
CLEANFEED Output Impedance (Phone channels):	100R balanced
Control Room LS Output (stereo):	+5dB for 0dB at PGM out, 50R output impedance, unbalanced
Studio LS Output (mono):	+5dB for 0dB at PGM out, 50R output impedance, balanced
CLEANFEED Rejection (Phone channels)	>70dB
MONO Input EQ:	+/-10dB at 8kHz, shelving +/-10dB at 630 Hz, bell +/-10dB at 40Hz, shelving
PHONE Input EQ:	+/-12dB at 3kHz, shelving +/-12dB at 160Hz, shelving
USB Inputs and Outputs:	Fully compliant with USB1.1
DIMENSIONS:	505mm wide x 510mm deep x 52 mm high (excluding knobs and buttons)
POWER:	Ext. DC Supply, 24V 40W, 100 to 240V 50/60Hz input

Aircaster M12 System Diagram

Inputs Section

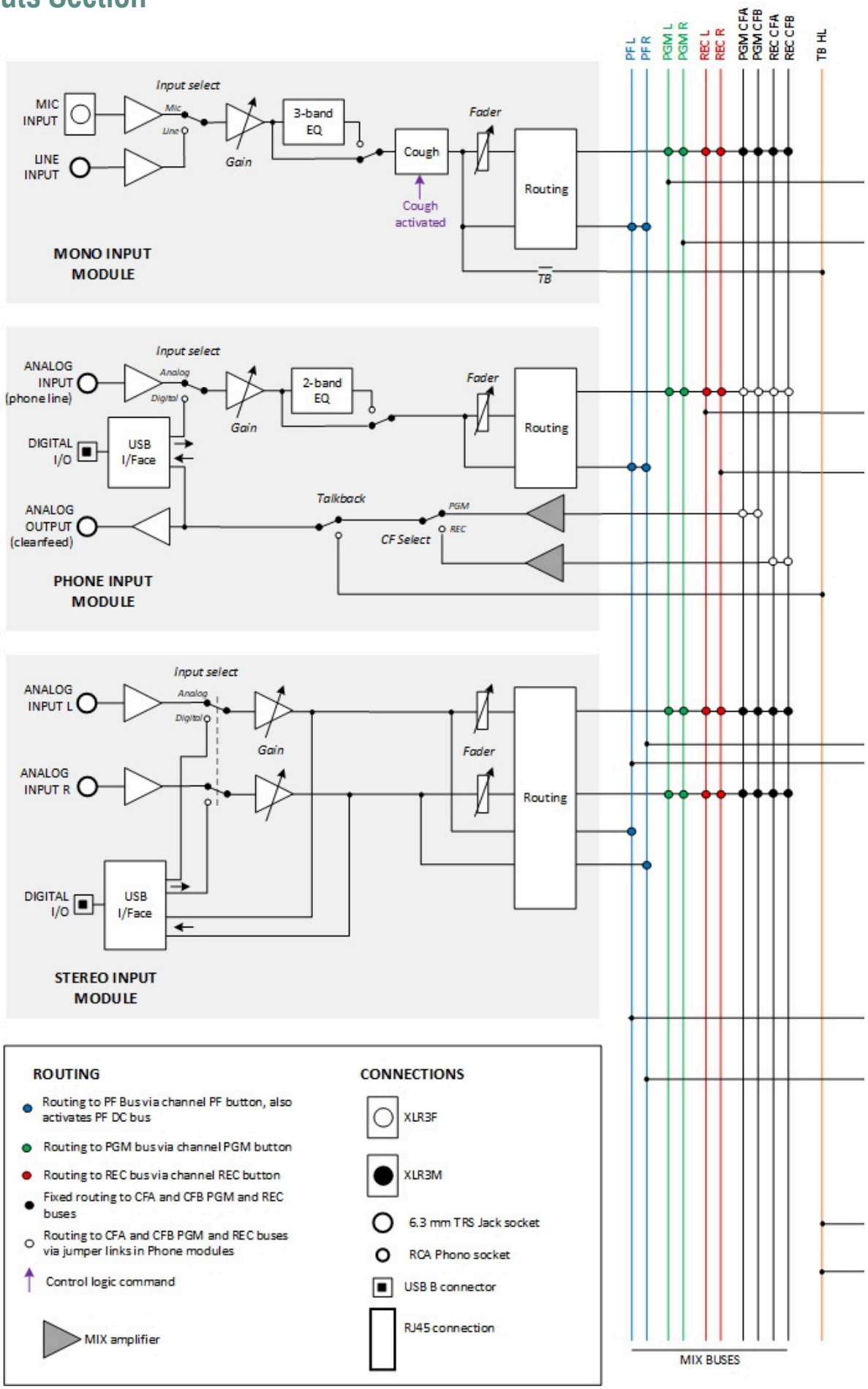

Aircaster M12 System Diagram

Outputs Section

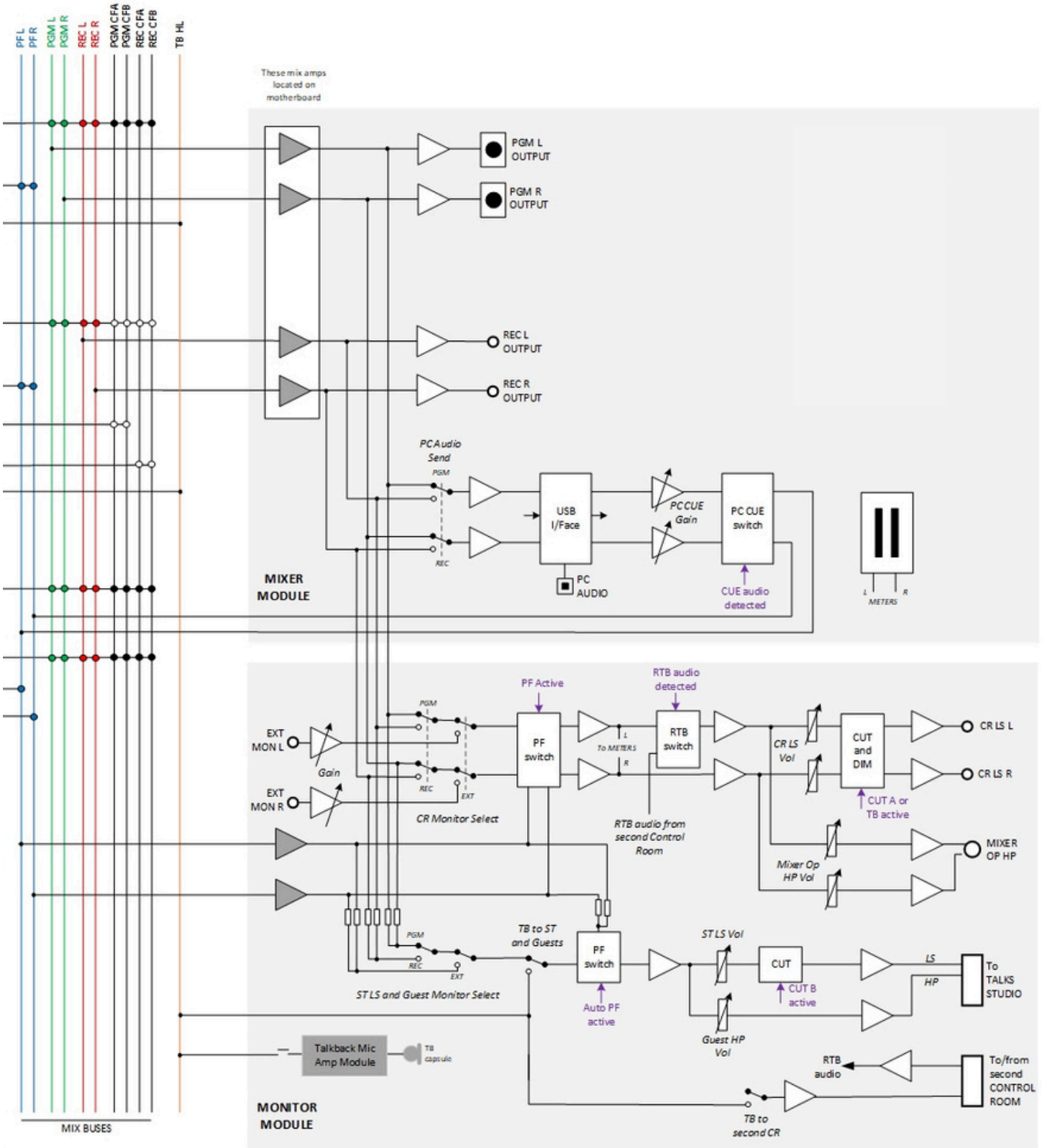

Dimensions

Overall width is 536 mm.

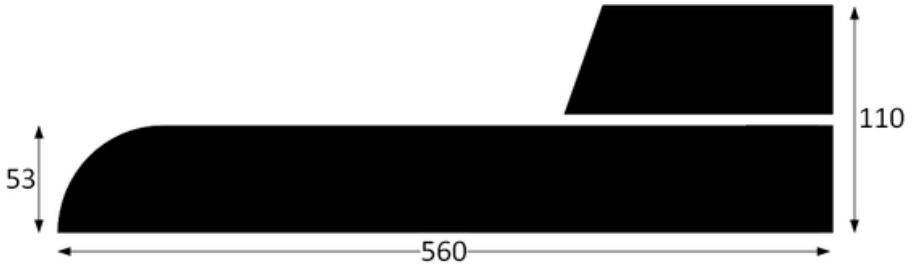

Typical studio arrangement

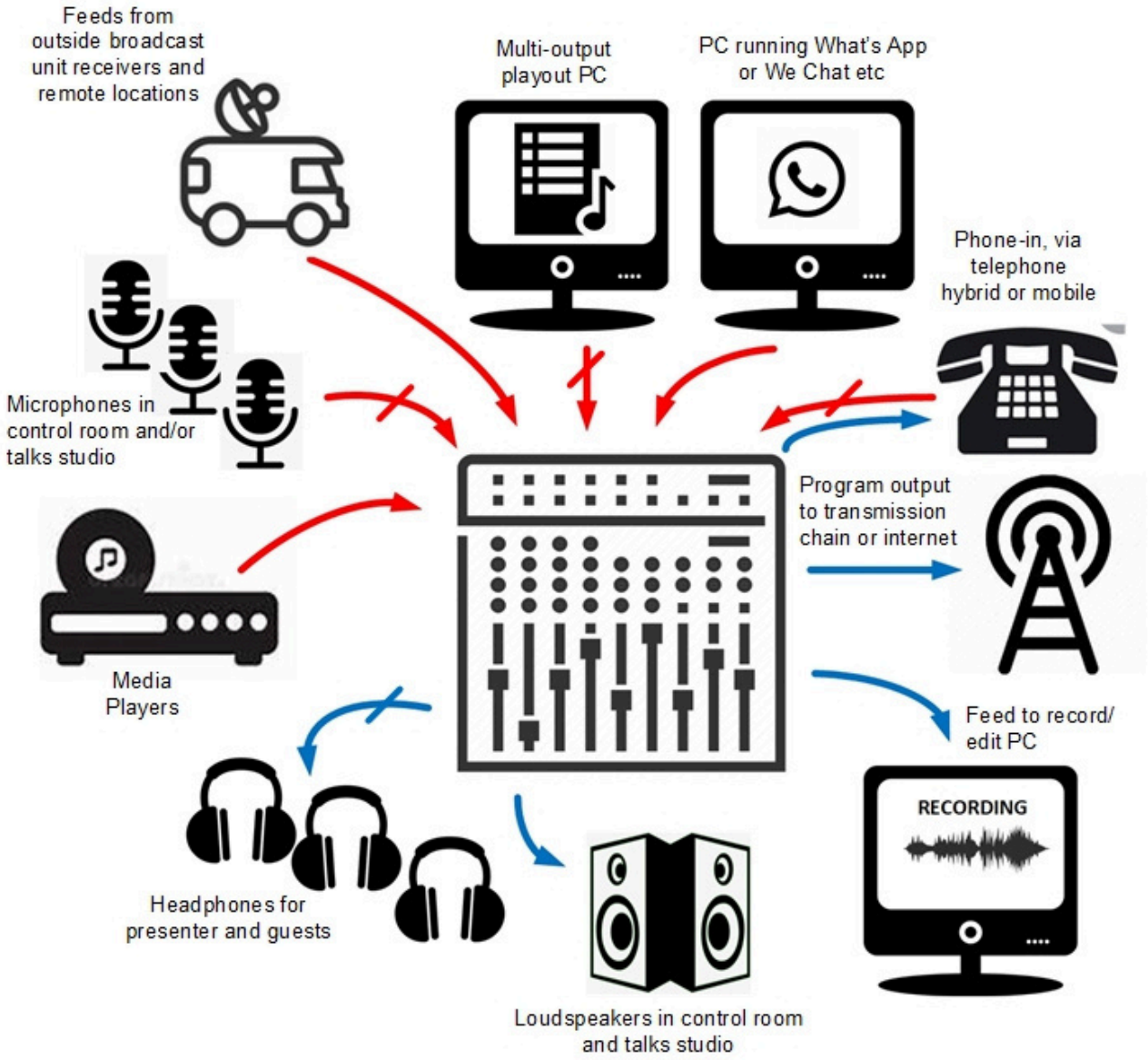

Multi-studio operation

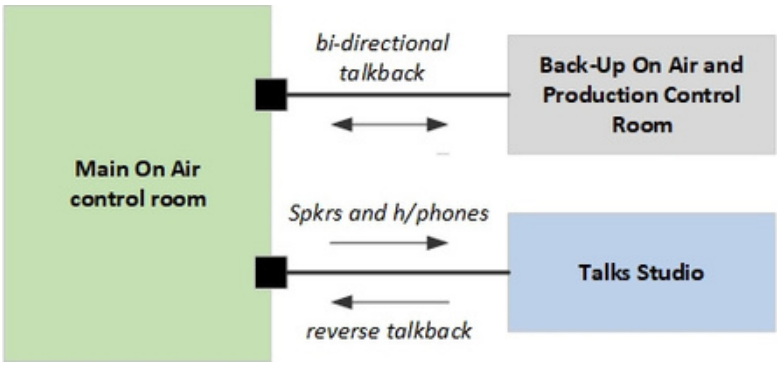

The monitor module has two multiway connectors for easy communication with a dedicated Talks Studio (for tech-op operation) and a second On Air/Production control room.

KLOTZ
MEDIA SOLUTIONS



Your local dealer

The Aircaster M12 is designed and assembled in the UK by Synergy Digital Ltd

For further information contact: sales@klotzmediasolutions.com or call on +44 7703 479926